spirax sarco®

K Series
Valve Spares

KEA ½" to 4" valve spares

For KEA 6" and 8" valve spares see overleaf.

Note: When placing an order for spares please indicate clearly the product date code (found on the label of the valve body e.g. F9) to ensure that the correct parts are supplied.

Spare parts

The spare parts available are in heavy outline. Parts drawn in broken line are not supplied as spares.
These spares are for sizes:

KEA41, KEA61 and KEA71 screwed ½" to 2" (DN15 to DN50)
KEA43, KEA63 and KEA73 flanged ½" to 4" (DN15 to DN100)

Available spares

Actuator clamping nut	A
Gland seal kit for 1/2" to 2" only (gasket, chevrons, spring, upper and lower bearings, 'O' ring and gland nut)	B
Gland seal kit for 2-1/2" to 4" only (gasket, chevrons, guide bush and spring)	B1
Graphite gland seal kit (graphite stem seals and stuffing box gasket)	C
Note: The graphite gland seal kit is suitable for stuffing box and bonnet designs.	
Standard plug (equal percentage, linear, or fast opening) and stem assembly with bonnet gasket	
Soft seated plug and stem assembly with bonnet gasket	D, E
Bonnet gasket (set of 3)	E
Seat, seat gasket and bonnet gasket	F, G, E

How to order spares
Always order spares by using the description given in the column headed 'Available spares', stating, the following information and the date code of the product.

Control valve selection guide

Valve size	Screwed ½" to 2" (DN15 to DN50) Flanged ½" to 4" (DN15 to DN100)	1"
Valve series	K = 2-port	K
Valve characteristic	L = Linear E = Equal percentage F = Fast opening	E
Design standard	A = ANSI /ASTM specification	A
Body material	4 = Cast steel 6 = Stainless steel 7 = Ductile iron	7
Connections	1 = Screwed 3 = Flanged	3
Stem sealing option	H = Graphite packing	
Seating option	G = Soft seal (PTFE) W = Hard facing	
Trim	N = Low noise	
C_V	To be specified	C_V 11.7
Connection type	To be specified	ANSI 150

1"	K	E	A	7	3				C_V 11.7	ANSI 150

Example: 1 - Seat, seat gasket and bonnet gasket for 1" KEA73 C_V 11.7 flanged to ANSI 150. Date coded F9.

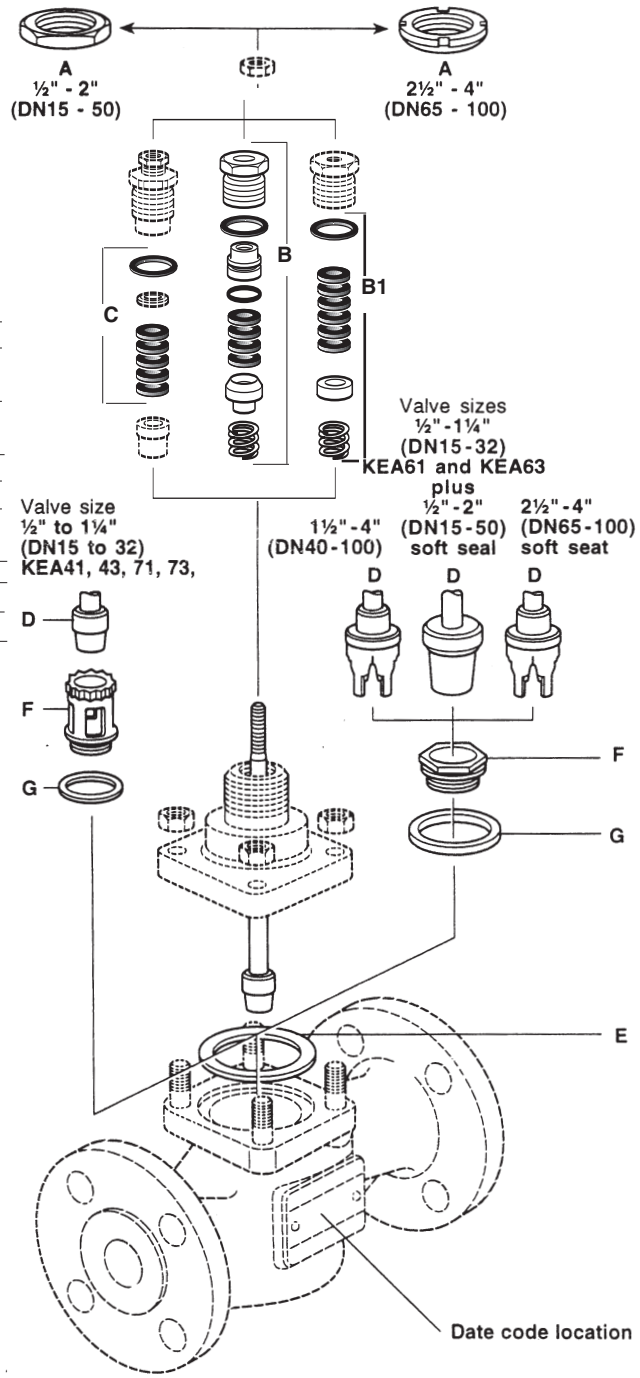

How to fit spares
Full fitting instructions are given in the Installation and Maintenance Instructions supplied with the spare.

Local regulation may restrict the use of this product below the conditions quoted. Limiting conditions refer to standard connections only.
In the interests of development and improvement of the product, we reserve the right to change the specification.

K Valve Spares

KEA 6" to 8" valve spares

For KEA ½" and 4" valve spares see overleaf.

Note: When placing an order for spares please indicate clearly the product date code (found on the label of the valve body e.g. F9) to ensure that the correct parts are supplied.

Spare parts

The spare parts available are in heavy outline. Parts drawn in broken line are not supplied as spares.
These spares are for flanged sizes 6" and 8" (DN150 and DN200).

Available spares

Actuator clamping nut	**A**
Gland seal kit (gasket, chevrons, guide bush and spring)	**B**
Graphite gland seal kit (top support ring, graphite stem seal, bottom support ring)	**C**
Standard plug (equal percentage, linear or fast opening) and stem assembly with bonnet gasket	**D, E**
Soft seated plug and stem assembly with bonnet gasket	**D, E**
Bonnet gasket (set of 3)	**E**
Seat, seat gasket and bonnet gasket	**F, G, E**
Soft seat seal kit (PTFE) soft seal and bonnet gasket	**H, E**

How to order spares
Always order spares by using the description given in the column headed 'Available spares', stating, the following information and the date code of the product.

Control valve selection guide

Valve size	Flanged 6" and 8" (DN150 and DN200)	**6"**
Valve series	K = 2-port	**K**
Valve characteristic	L = Linear E = Equal percentage F = Fast opening	**E**
Design standard	A = ANSI / ASTM specification	**A**
Body material	4 = Cast steel 6 = Stainless steel 7 = Ductile iron	**7**
Connections	3 = Flanged	**3**
Stem sealing option	H = Graphite packing	
Seating option	G = Soft seal (PTFE) W = Hard facing	
Trim	N = Low noise C = Anti-cavitation	
C_V	To be specified	**C_V 280**
Connection type	To be specified	**ANSI250**

6"	K	E	A	7	3				C_V 280	ANSI250

Example: 1 - Seat, seat gasket and bonnet gasket for 6" KEA73 C_V 280 flanged to ANSI 250. Date coded F9.

How to fit spares
Full fitting instructions are given in the Installation and Maintenance Instructions supplied with the spare.

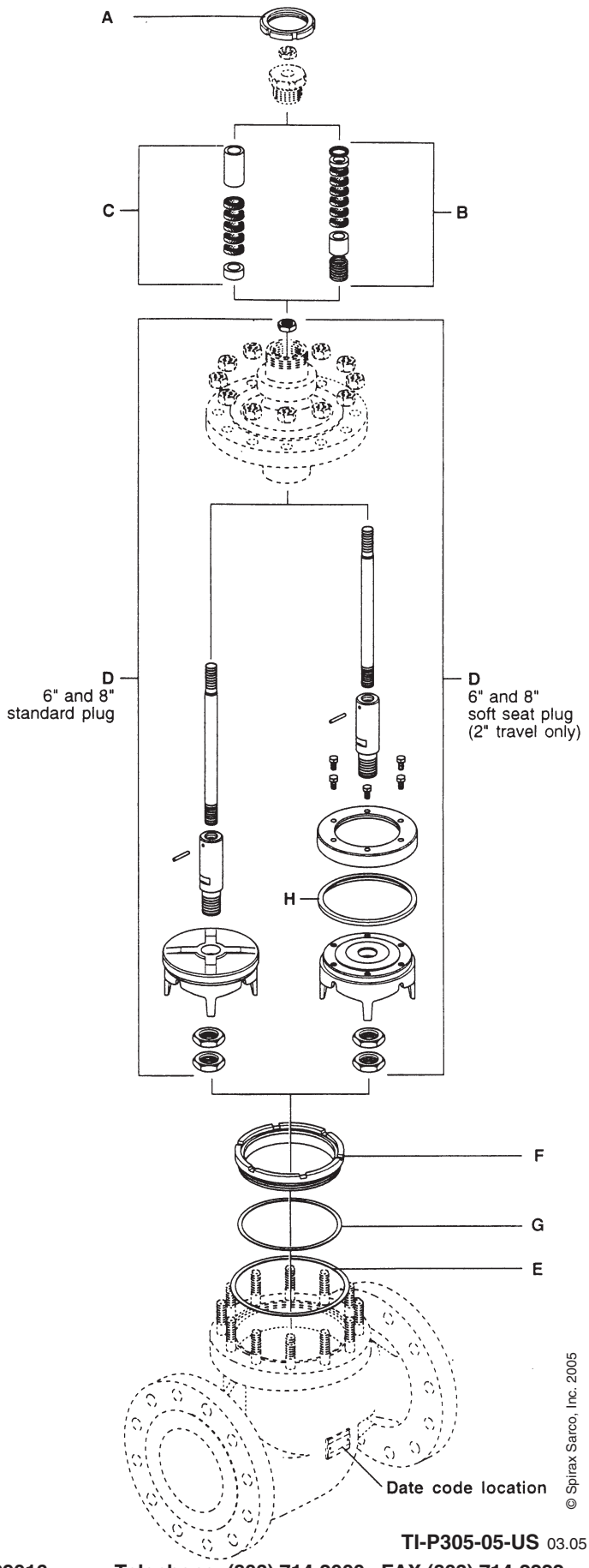

© Spirax Sarco, Inc. 2005

Spirax Sarco, Inc., 1150 Northpoint Blvd., Blythewood, SC 29016 Telephone: (803) 714-2000 FAX (803) 714-2222